Design and performance analysis of Visible Light Communication system through simulation

K.Sindhubala [1,*] **and** ***B.Vijayalakshmi*** [2]

[1]*Research Scholar*, Department of Electronics and Communication Engineering

[2]*Professor,* Department of Electronics and Communication Engineering

B.S Abdur Rahman University, Chennai, India

sindhumtech@yahoo.com[1], vijayalakshmi.b@bsauniv.in[2]

Abstract- **An NRZ OOK visible light communication system is designed and simulated, using a white LED of wavelength 450 nm and a Photodetector. Ambient light noise source such as fluorescent lamp generated by conventional ballast is one of the important sources of degradation which affects the performance of the communication system. By using rectangular optical filter before the photodiode at the receiver, it reduces the ambient noise, improves the BER and clear eye diagram is achieved. Simulation of VLC system is done by using optisystem software. In this paper, performance analysis of optical to electrical power conversion, BER, Threshold, eye opening is done with respect to distance between the transmitter and receiver.**

Keywords- Bit Error Rate, Non Return to Zero on Off Keying, Visible Light Communication.

I. INTRODUCTION

Recent advancements in solid state electronic devices such as light emitting diode (LED) has triggered the possibility of illumination along with communication which is popularly known as Visible Light Communication system (VLC).VLC acts as an added supplement to the existing RF communication due to the property light cannot travel through the walls, it is highly secure, hazardless and it can be used even in RF prohibited areas like hospitals and airplanes. In the recent years there is great advancements in the manufacturing process, luminous efficiency, brightness and control and thermal design related to LED.VLC finds its application in many areas such as hospitals, underwater communications, road to vehicular communications and location based communications.

VLC is standardized by Institute of Electrical and Electronics Engineers (IEEE) [1]. Visible Light Communications Consortium, Japan carried out an initial research on visible light communication [2]. Now Asia, Europe, Wireless World Research Forum are also working in VLC research [3]. Thus, the lights used daily in our everyday life are expected to serve with both illumination and communication in the future.

In this paper, VLC system under the influence of ambient light noise source such as fluorescent lamp of power 36W and frequency 50Hz is designed, simulated and its performance is analyzed using optisystem software. This paper is organized as the following sections. In Section II, Theory and modeling Visible Light communication system is described. Section III, Simulation methodology of VLC system is described. Section IV, Results and discussion is described.

II.THEORY OF INDOOR VISIBLE LIGHT COMMUNICATION SYSTEM

VLC is a short range optical wireless communication technology which is acknowledged as the future in green lighting as it acts as a twin role for illumination and data communication.Visible Light communication (VLC) uses the spectrum of visible light from 380 nm to 780 nm .The basic blocks of VLC uses white LEDs as the optical source, free space channel as the medium and Photodetector at the receiver. Free space channel is advantageous over the conventional fibre optic cable as there is no requirement for cable, the installation cost is less, faster transmission and no RF interference [4].

A. VLC Transmitter

VLC uses white LED in the transmitter side as an optical source when compared to the conventional light sources such as incandescent lamps and fluorescent lamps. White LEDs are expected to serve the next generation of lamps due to the properties such as low power consumption, high brightness, and long lifespan of more than 50,000 hours. Environmental and health hazards are less in White LEDs as they are not driven by ballast and it does not contain toxic mercury. There are two types of LEDs available in market to produce white light for illumination. They are Yellowish phosphor based LEDs and RGB LEDs[4]. In our work, we have used Phosphor based LED as they produce more lumens per watt, cost efficient and less complex when compared to RGB LED.Thus data is transmitted using intensity modulation (IM)

978-1-4799-7623-2/15/$31.00 ©2015 IEEE

Authorized licensed use limited to: TU Hamburg. Downloaded on June 01,2025 at 12:49:33 UTC from IEEE Xplore. Restrictions apply.

technique with the use of white LED. The detected intensity is converted to electrical signal by Photodetector. This process is called direct detection (DD). IM/DD methods are advantageous over the other methods, since they are simple and easy to implement.

B. Channel Modeling

The noise model should also be included with the channel model. Ambient light noise sources such as sunlight, incandescent lamps, and fluorescent lamps are considered to degrade the performance of the communication system [7]. Thus visible light communication channel is modeled as a linear optical additive white Gaussian noise (AWGN) channel and is given by eq. (1)

$$I(t) = \eta\, p_i(t) \otimes h(t) + N(t) \quad (1)$$

Where I(t) is the photo detector current, η is the photosensitivity of the Photo detector, the instantaneous input power, the symbol, $\otimes$ denotes the convolution, h(t) denotes the impulse response and N(t) denotes the AWGN noise. VLC can be applied in two different scenarios which are Line Of Sight (LOS) and Non Line Of Sight (NLOS)[5-6].

Line Of Sight (LOS) is the unobstructed path of communication between the transmitter and the receiver. The transmitter directs the light beam in the direction of the receiver.

In the LOS case the received power is given by eq. (2)

$$P_r^{LOS} = H_{LOS}(0)\, P_t \quad (2)$$

In the NLOS case, the light reflected by walls or any other obstacles is taken under consideration. The received power is generally given by the channel DC gain on LOS and reflected path $H_{ref}(0)$ is given by eq. (3)

$$P_r = H_{LOS}(0)\, P_t + H_{NLOS}(0)\, P_t \quad (3)$$

$$= H_{LOS}(0)\, P_t + \sum_{ref} H_{ref}(0)\, P_t \quad (4)$$

In our work we have considered ambient light noise such as fluorescent lamp driven by conventional ballast and line of sight (LOS) model between the transmitter and receiver to achieve better data rate.

C. VLC Receiver

VLC receivers use Photodetector which converts optical signal from the channel into electrical signal. Two different kinds of photodiodes such as Avalanche photodiode (APDs) and positive-intrinsic-negative (PIN) photodiodes are used.PIN photodiodes are used in most applications due to low cost, linear response characteristics over the wide ranges, low operation and tolerance to high temperature fluctuations to improve the receiver performance. .VLC receiver also includes amplifier, filters and demodulator to recover back the original data[4].

In our work, VLC Receiver we have considered consists of PIN photodiode as a Photodetector because of its advantages over APDs.VLC receiver also includes optical rectangular filter, transimpedance amplifier, and electrical low pass filter and regenerator to recover back the original data. Fig.1.Shows the block diagram of basic blocks of Visible Light Communication system

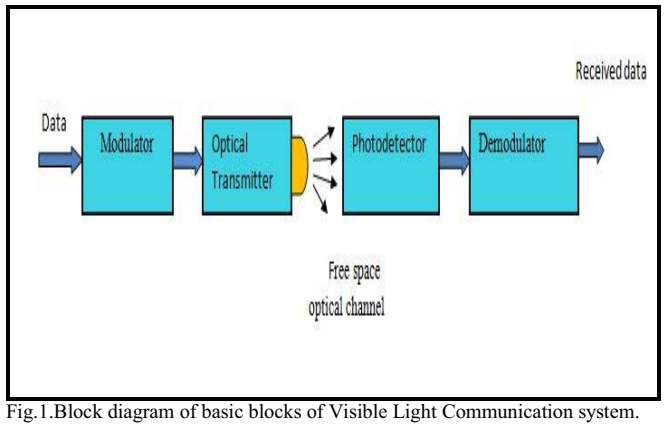

Fig.1.Block diagram of basic blocks of Visible Light Communication system.

III.SIMULATION METHODOLOGY

The simulation of Visible Light Communication system is performed using Optisystem software of Optiwave Corporation. Optisystem is a system level simulator for the realistic modelling the optical communication components in order to analyze the performance of the system with minimum cost, effort and time.

A. Visible Light Communication system Simulation using Optisystem

Fig.2. shows the block diagram of proposed VLC system using Optisystem.VLC system consists of three blocks Transmitter, free space optical channel and receiver. At the transmitting end it consists of a PRBS generator at 10 Kbit/sec, NRZ pulse generator, a LED operating at wavelength 450nm and having modulation bandwidth 1 MHz and the transmitted signal is sent through the free space channel of distance varying from 1 to 10 m and the artificial light noise source such as fluorescent lamp generated by conventional ballast of frequency 50 Hz and power 36W is considered which affects the performance of the system. Line of sight link is considered so that there is no obstructed path between the transmitter and receiver. Thus the optical signal from LED and fluorescent lamp is received by the rectangular optical filter placed before the PIN Photodetector to reduce the ambient light noise and the filtered optical signals are converted into electrical signal. TIA acts as a front-end amplifier for amplifying the weak current signals generated from the photodiode (PD) and converting to voltage signal. Low pass Bessel filter is used to remove the undesired frequency components. Bit sequence regenerator is to recover back the original bit sequence. BER analyzer is then connected to the 3R-Regenerator to compute BER values of the received signal. Eye diagram analyzer is also connected

Authorized licensed use limited to: TU Hamburg. Downloaded on June 01,2025 at 12:49:33 UTC from IEEE Xplore. Restrictions apply.

and used to produce the eye diagram. Thus the performance of the VLC system is analyzed using the simulative results.

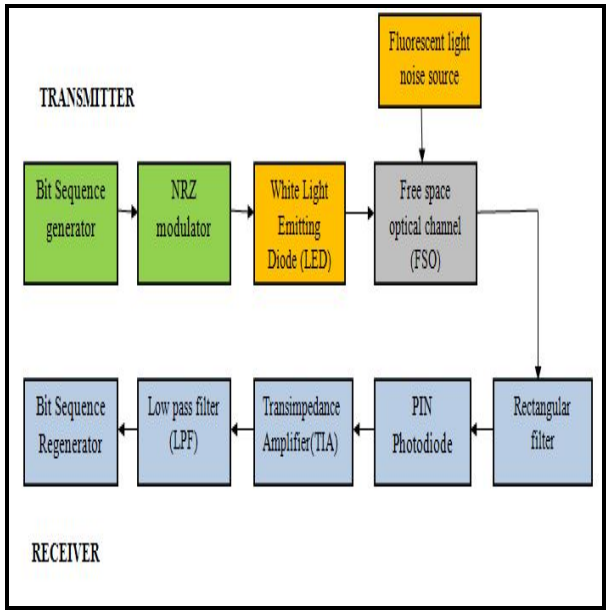

Fig.2.Block diagram of our proposed Visible Light Communication system using Optisystem

TABLE I. List of majorly used optisystem components for the simulation of VLC system along with the value assigned to each parameter.

Parameter	Value
Bitrate	10kbps
Modulation	NRZ-OOK
Optical source(White LED)	Wavelength:450 nm Bandwidth: 1MHz
Ambient light noise source(Fluorescent lamp driven by conventional ballast)	Frequency:50 Hz Power:36W
Channel	Free space channel
Distance	1-10 m
Rectangle optical filter	Wavelength:450 nm Bandwidth: 1 MHz
Silicon PIN photodiode(λ=450nm)	Responsivity:0.22 A/W
Transimpedance amplifier	Voltage gain:90 Ohm Bandwidth:240MHz
Low pass Bessel filter	Cut off frequency:0.75*Bitrate

In TABLE I. The parameters such as bitrate, bit sequence wavelength of LED, rectangular optical filter (wavelength and bandwidth), photodiode responsivity, transimpedance amplifier(voltage gain and Bandwidth),Low pass filter cut off frequency are set to be constant throughout the simulation. These values are chosen to meet the standard Visible Light Communication system which uses the spectrum of visible light from 380 nm to 780 nm.The main parameters and values we have used are the standard values provided by the vendor's datasheet. The white LED used is a Cree, XLamp XR-E LED) of operating wavelength 450nm and Bandwidth 1MHz. Photodiode used is (Thorlabs PDA36A) which operates at the wavelength of 380-780 nm [8].The transimpedance amplifier used is (AD8015) of voltage gain 90 Ohm and bandwidth 240 MHz[9].Fig.3.Shows the proposed Visible light communication system simulation set up using above parameter and values

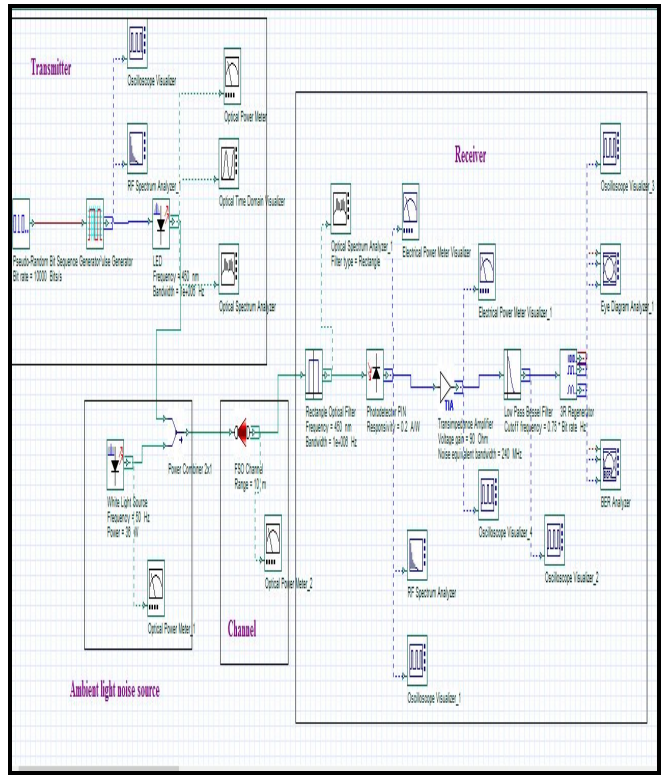

Fig.3.proposed Visible light communication system simulation set up using Optisystem

IV.RESULTS AND DISCUSSION

By using the values listed in TABLE I. we have designed the visible light communication system under the influence of ambient light noise .We have analyzed the output results using different analyzers such as RF spectrum analyzer, oscilloscope visualize, eye diagram analyzer and BER analyzer. Optical power of white LED is 2.735 E-3 W which gets added to the ambient light noise optical power of 92.156 E6 W when the data signal is passed through the free space channel where the received optical power is 43.501 E6 W is achieved for 10m and the corresponding received electrical power at the photodiode is 168.175W

Authorized licensed use limited to: TU Hamburg. Downloaded on June 01,2025 at 12:49:33 UTC from IEEE Xplore. Restrictions apply.

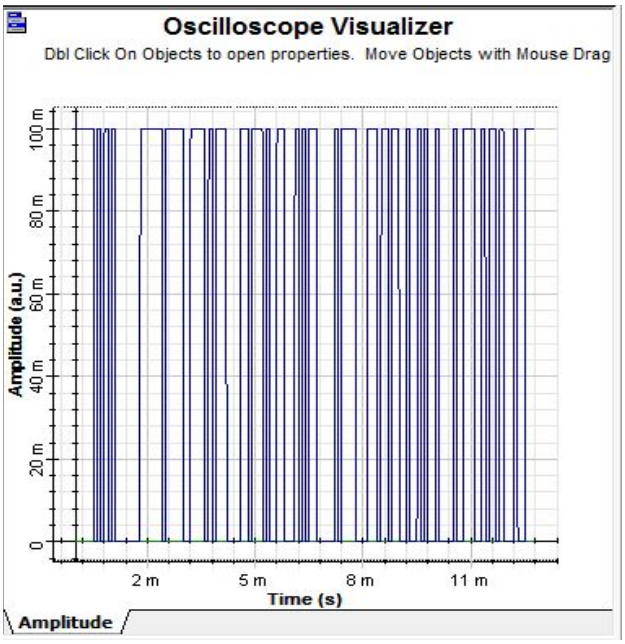

Fig.4.Oscilloscope visualizer output of 10 Kb/s NRZ-OOK signal.

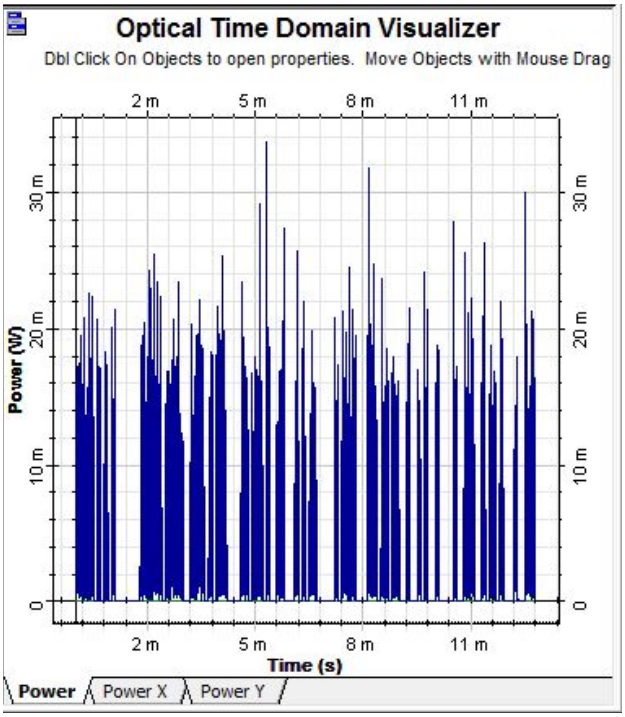

Fig.5.Optical Time Domain visualizer output of LED modulated signal

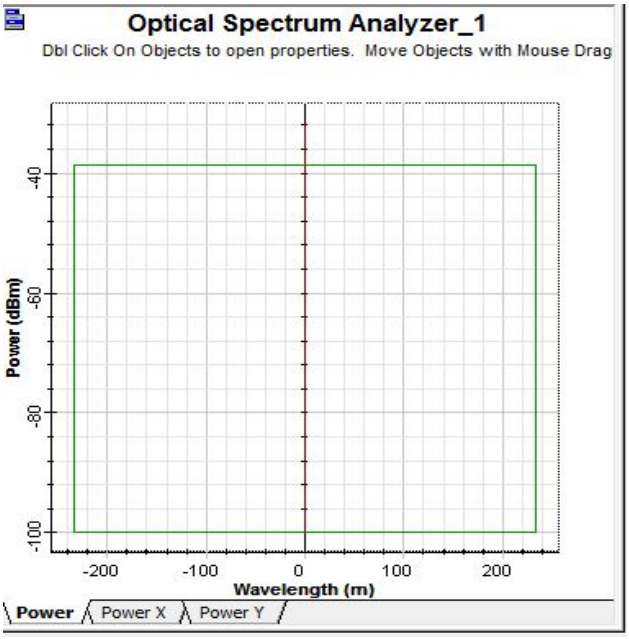

Fig.6.Optical Spectrum Analyzer output of rectangular filter

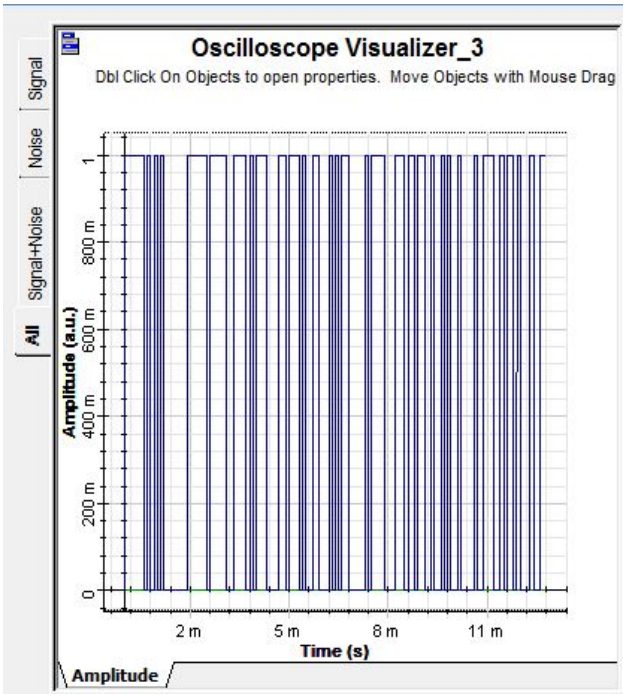

Fig.7.Oscilloscope visualizer output of recovered NRZ OOK signal

From Fig.4 and 7 it is observed that the transmitted signal is recovered back at the receiver and the bit sequence generated remains the same.

Authorized licensed use limited to: TU Hamburg. Downloaded on June 01,2025 at 12:49:33 UTC from IEEE Xplore. Restrictions apply.

From the Fig.8.it is observed that the Minimum BER of 2.48403 e-033 is achieved for the distance of 10m between the transmitter and receiver for 10 kb/s signal.

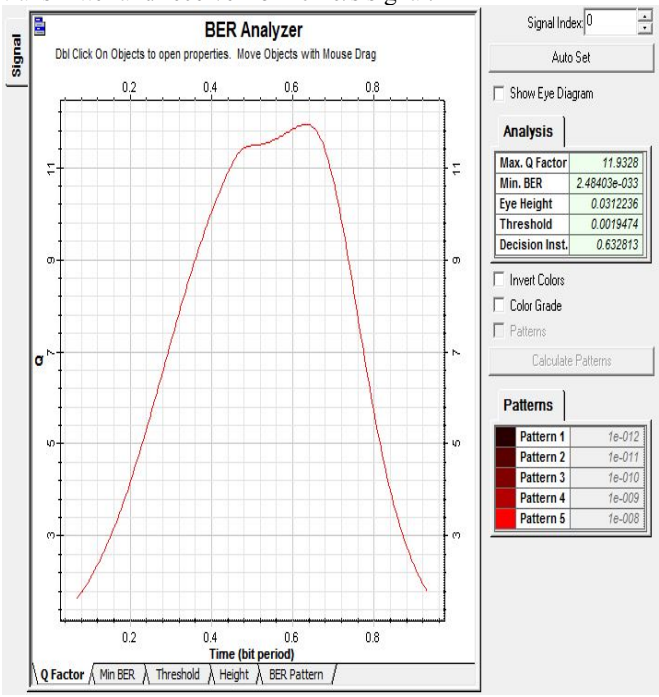

Fig.8.BER Analyzer output for 10 Kb/s NRZ-OOK signal.

From the Fig.9 it is observed that the Minimum BER of 2.48403 e-033 is achieved for the distance of 10m between the transmitter and receiver for 10 kb/s signal.

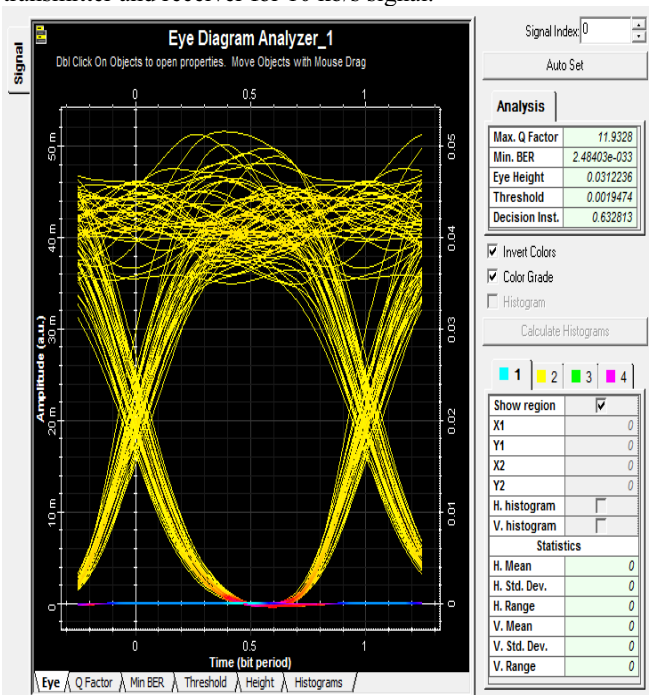

Fig.9.Eye Diagram Analyzer output or 10 Kb/s NRZ-OOK signal

From the graph shown in Fig.10 it is observed that the Electrical power at the photodiode decreases linearly for different Distance between the transmitter and receiver for 10 kb/s signal.

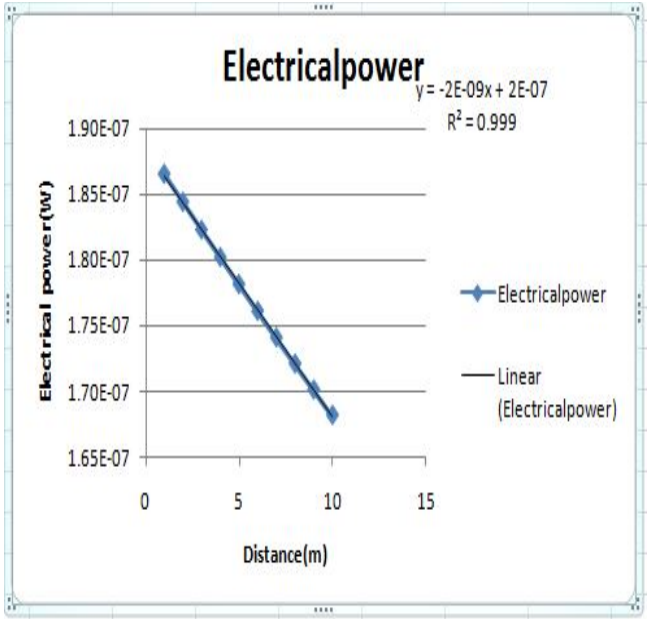

Fig.10.Free space channel Distance vs. Electrical power at the photodiode for 10 Kb/s NRZ-OOK signal

From the graph shown in Fig.11 it is observed that the eye height linearly decreases for different distance between the transmitter and receiver for 10 kb/s signal.

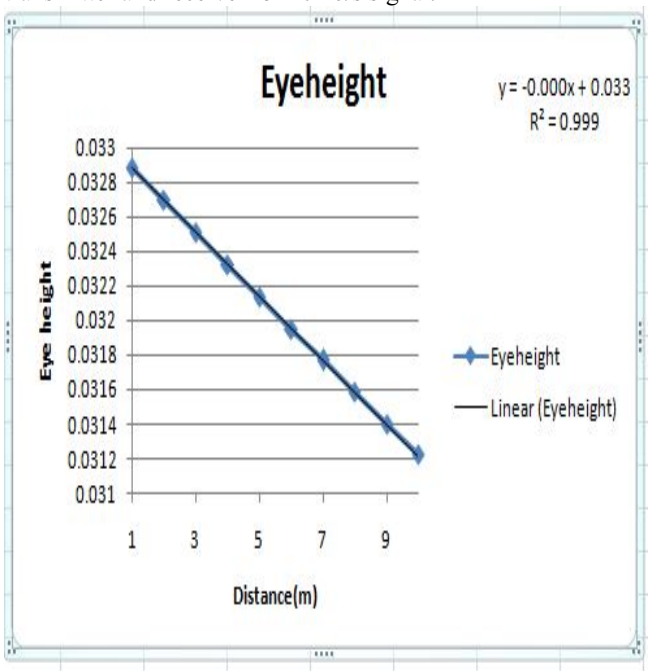

Fig.11. Free space channel Distance vs.Eyeheight for 10 Kb/s NRZ-OOK signal

Authorized licensed use limited to: TU Hamburg. Downloaded on June 01,2025 at 12:49:33 UTC from IEEE Xplore. Restrictions apply.

From the graph shown in Fig.12 it is observed that the Threshold value is following 2nd degree polynomial and decreases for different distance between the transmitter and receiver for 10 kb/s signal.

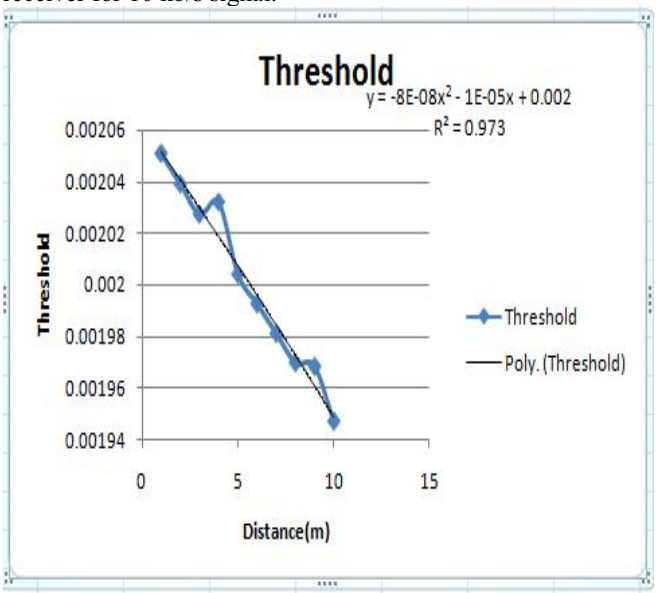

Fig.12. Free space channel Distance vs. Threshold for 10 Kb/s NRZ-OOK signal

From the graph shown in Fig.13.It is observed that the Minimum BER of 2.48403 e-033 remains constant for different distance between the transmitter and receiver for 10 kb/s signal.

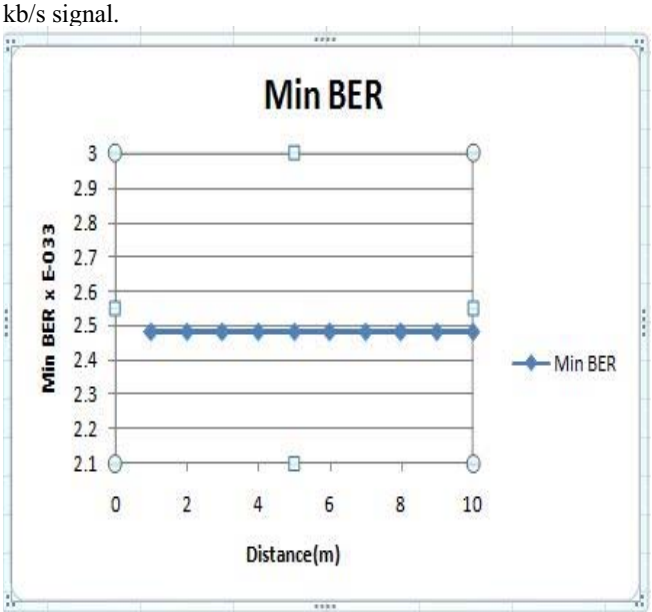

Fig.13. Free space channel Distance vs. Min BER for 10 Kb/s data signal

V. CONCLUSION

In this paper detailed study of VLC system based on vendor's specifications using optisystem software is designed and simulated. The performance analysis of various parameters such as BER, Eye height, Threshold etc are presented. Thus visible light communication for indoor application is established for a data rate of 10kb/s and distance up to 10m which acts as an added supplement to existing RF communication. The ambient light noise reduction technique using rectangular optical filter is also addressed in this paper. By overcoming the challenges of ambient light noise interference min BER is achieved. This study of VLC helps the designers to choose different configuration selections and it can be applied practically in order to achieve better performance, minimize the effort and time.

REFERENCES

[1] IEEE Standards Association, IEEE Standard for Local and metropolitan area networks - Part 15.7: Short-Range Wireless Optical Communication Using Visible Light (IEEE Std 802.15.7), 2011

[2] Visible Light Communications Consortium, www.vlcc.net, 2008.

[3] Wireless World Research Forum http://www.wireless-world-research.org

[4] M.Saadi, L.Wattisuttikulkij, Y.Zhao, P.Sangwongngam, "Visible Light Communication: Opportunities, Challenges and Channel Models,"International Journal of Electronics and Informatics, vol. 2, Feb.2013.

[5] M.Shahin Uddin, J.Sang Cha, J.Young Kim and Y. Min Jang,"Mitigation Technique for Receiver Performance Variation of Multi-Color Channels in Visible Light Communication," Sensors Journal, vol.11,pp.6131-6144,Jun.2011.

[6] L.Grobe,A.Paraskevopoulos,J.Hilt,D.Schulz,F.Lassak,F.Hartlieb,C.Kottke,V.Jungnickel,andD.Langer,"High Speed Visible Light Communication Systems,"IEEE communications magazine,vol.51,pp.60-66,Dec.2013.

[7] C.Chang, Y.Su, U.Kurokawa, and B.Ichoi, "Interference Rejection Using Filter-Based Sensor Array in VLC Systems," IEEE sensors journal, vol. 12, May.2012.

[8] C. W. Chow. H. Yeh,Y. F. Liu,P. Y. Huang,"Mitigation of Optical Background Noise in Light-Emitting Diode (LED) Optical Wireless Communication Systems," IEEE photonics Journal, vol.5,Jan.2013.

[9] A. Burton, C. Amiot, H. L. Minh and Z. Ghassemlooy, "Design of an integrated Optical Receiver for Mobile Visible Light Communications," PGNet, 2011.

Authorized licensed use limited to: TU Hamburg. Downloaded on June 01,2025 at 12:49:33 UTC from IEEE Xplore. Restrictions apply.